Camera					
Appellation	Aluminium Vandal Dome Camera				
Model	DAN-15AHD200A-2.8	DAN-15AHD200A-3.6	DAN-15AHD200A-6		
Image Sensor	2.0MP 1/2.7" SC2235 CMOS Sensor (XM330)				
Scanning System	Progressive				
Min. Illumination	color : 0.1Lux@(F1.2, AGC ON), 0Lux with IR Black & White : 0.01Lux@(F1.2, AGC ON), 0Lux with IR				
Shutter Speed	1/50(1/60)seconds to 1/10,000 seconds				
Lens					
Focal Length	2.8mm	3.6mm	6mm		
Visual Angle	98°	89°	56°		
Aperture	F2.0				
IR					
IR LED	15pcs Infra-Red Lamps , F5, 10mil, 90°				
IR Range	10m				
Wavelength	850nm				
Image					
Max. Resolution	1920(H)×1080(V)				
Video output @ FPS	AHD 1080p@30fps / 1080p@25fps				
Day & Night	IR cut filter with Auto Switch				
Back Light Compensation	Support				
Digital Noise Reduction	2D-DNR				
Wide Dynamic	N/A				
General					
Ingress Protection	TVS 2000V lightning protection, surge protection and voltage transient protection				
Material	Aluminium				
Waterproof	IP66				
Painting Style	Powder Coating				
Color	Wtite				
Operation Temperature	-10℃ to 60℃				
Operation humidity	Relative humidity less than 90%				
Power	DC12V(±10%), MAX 4W				
Size	Φ112.85*82.02mm				
Weight	430g				
Packing	600*480*225mm / 40pcs/Box				
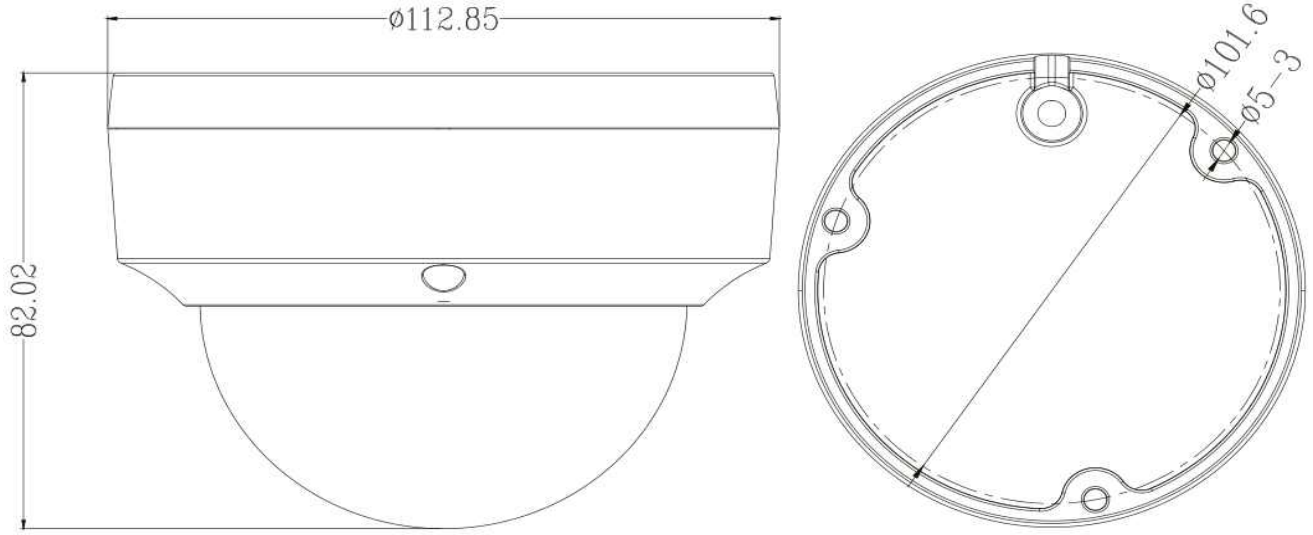
Dimensions